MASTER INDEX.....01
GEN INFO WARRANTY PLATE.....01
ALPHA INDEXES
ACCESS.....02
CHASSIS.....02
ENGINE
6000.....03
ILLUS.....05
MAN TRANS
7000.....07
PARTS LIST.07
EXTERNAL PARTS.....10
7200.....11
ILLUS.....12
AUTO TRANS
7000.....14
ILLUS.....14
TRANSMATIC
7000.....15
ILLUS.....15
COOL-GRILLE
8000.....16
8546.....17
ILLUS.....18
FUEL-CARB
9000.....19
9300.....20
9510.....20
9600.....21
9622.....22
ILLUS.....23
10000-19999
BODY-S/T C/REFERENCE
TRANS #4
DSO APPEARS IN FPS 8473-M

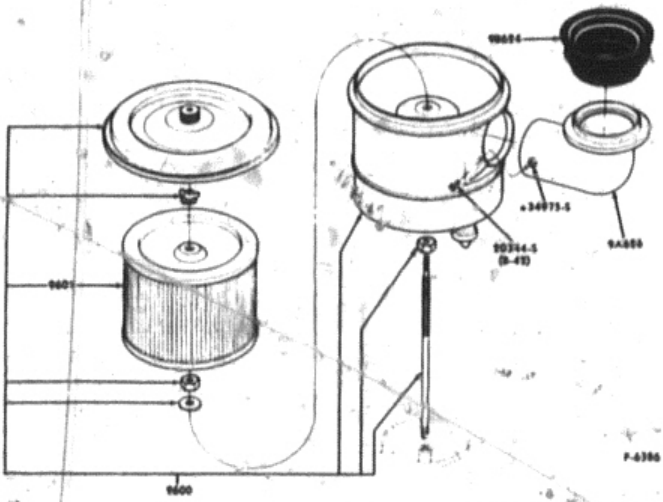

AIR CLEANER and RELATED PARTS (DRY TYPE)
1973/ B700 and F600/700--DIESEL

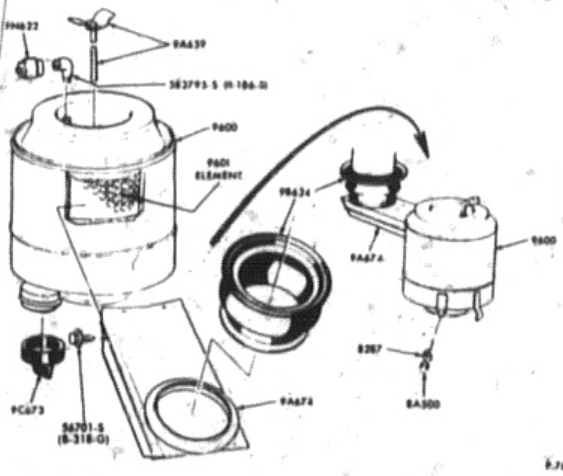

AIR CLEANER and RELATED PARTS (DRY TYPE)
1973/ LN600/700--DIESEL

COPYRIGHT © 1980 FORD MOTOR COMPANY DEARBORN, MICHIGAN